Copyright © Shenzhen Inovance Technology Co., Ltd.

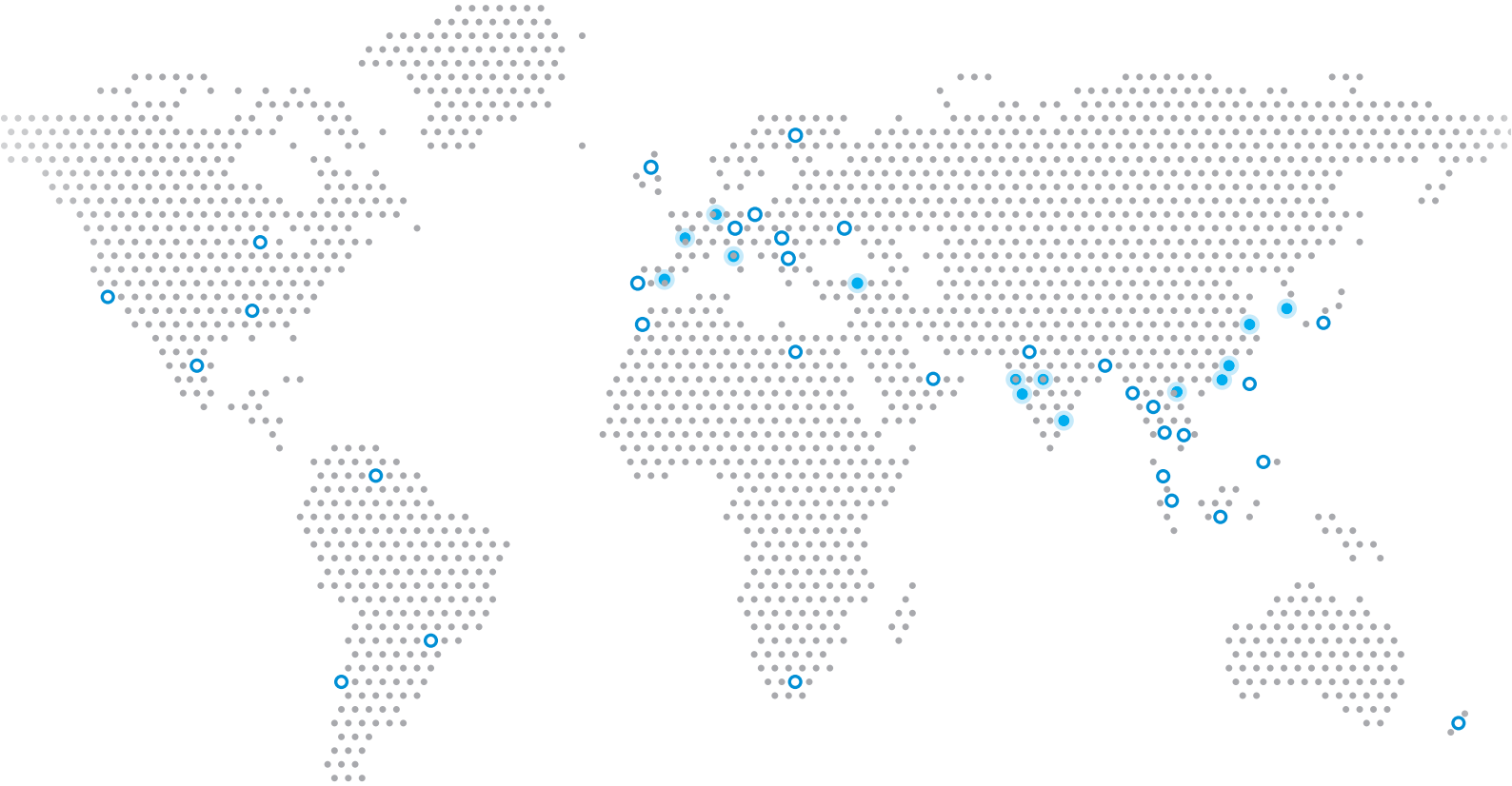

Inovance Worldwide
Distribution & Service Partners

Advancing industrial technology, for a better world

www.inovance.eu

Enquires: info@inovance.ind.in

Shenzhen Inovance Technology Co., Ltd.
Suzhou Inovance Technology Co. Ltd.

4000-300124
info@inovance.com
service@inovance.com

Hong Kong SAR
International Export Office

+852 2751 6080
info@inovance.eu

Germany-Stuttgart
+49 (0) 7144 8990
sales.de@inovance.eu

France-Bordeaux
+33 (0) 5594 01050
sales.fr@inovance.eu

Spain-Barcelona
+34 93 504 94 48
sales.es@inovance.eu

Italy-Milano
+39 (0) 2268 22318
sales.it@inovance.eu

Turkey-Istanbul
+90 (216) 466 7600
sales.tr@inovance.eu

South Korea-Seoul
+82 (0) 10 7428 5732
sales.kr@inovance.eu

India
Head Office Chennai | +91 (0) 44 4380 0201
Ahmedabad | +91 (0) 79 40034274
Mumbai | +91 (0) 22 4516 6255
Noida | +91 (0) 120 402 8235
Hyderabad | +91 (0) 40 4951 6431
Surat | +91 93846 65692

Sales Network
Kolkata, Bengaluru, Pune, Coimbatore, Visakhapatnam, Vadodara, Jaipur, Chandigarh

info@inovance.ind.in

INOVANCE

FOLLOW US

All-Electric Injection Molding Machine System Solution

Application

Widely used in such industries as electronics, optics, automotive components, medical devices, cosmetics, toys, packaging, powder molding, and silicone.

Open

Digital

Intelligent

Sustainable

Solution Overview

This solution is designed for a range of electric injection molding equipment, including standard horizontal all-electric injection molding machines, hydraulic-electric injection molding machines, vertical injection molding machines, electric secondary carriages, and multi-material injection molding machines. It covers a wide spectrum of applications with clamping forces from 10 to 1380 tons and injection speeds from 0 to 500 mm/s.

The solution provides comprehensive process support and allows secondary development to adapt to virtually any injection molding applications. It stands out with complete system integration that combines the cloud platform, control systems, servo drives, servo motors, high-load ball screws, and ring force transducers.

Features

- Open and flexible: Modular software architecture and process design, supporting secondary development to quickly build your competitive edge
- Sustainable and efficient: Common DC bus and multi-point servo drive, saving energy by 5% to 30% and cabinet space by 60%
- Digital and intelligent: End-to-end real-time data integration, AI-powered automatic optimization, and open ecosystem for more efficient smart manufacturing
- Safe and reliable: Multiple active and passive safety protections for equipment and personnel
- Global compliance: Meets CE, UL, cUL, and STO functional safety certifications

Performance Metrics

- Barrel temperature control: Steady-state accuracy of ±0.5° C
- Axis positioning accuracy: Absolute positioning error of ±0.01 mm
- Dual-screw dual-axis deviation: ≤ 0.05 mm (dynamic); ≤ 0.01 mm (steady-state)
- Injection pressure control: Overshoot ≤ 5%; steady-state fluctuation ≤ ±1 bar
- Production process: Residual material position deviation ≤ 0.07 mm; production cycle deviation ≤ 10 ms; product weight deviation ≤ 0.1%
- Drive: Local high-speed profile planning and closed-loop control up to 16 kHz, enabling high response and low torque fluctuation

Topology

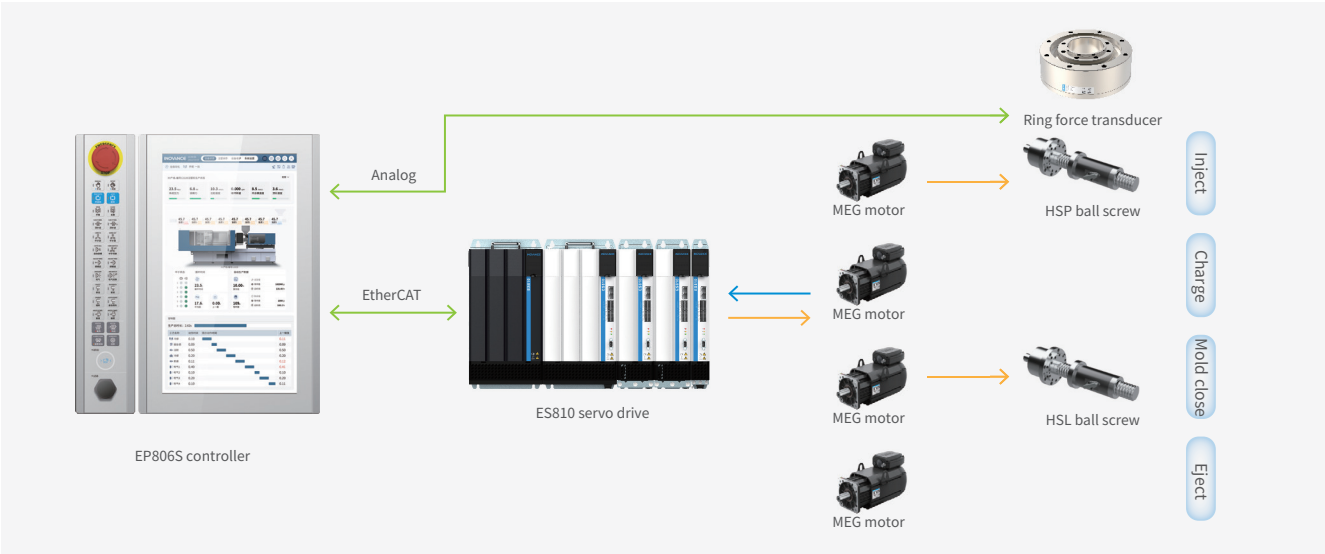

Dedicated Servo Motor

MEG Series Servo Motor

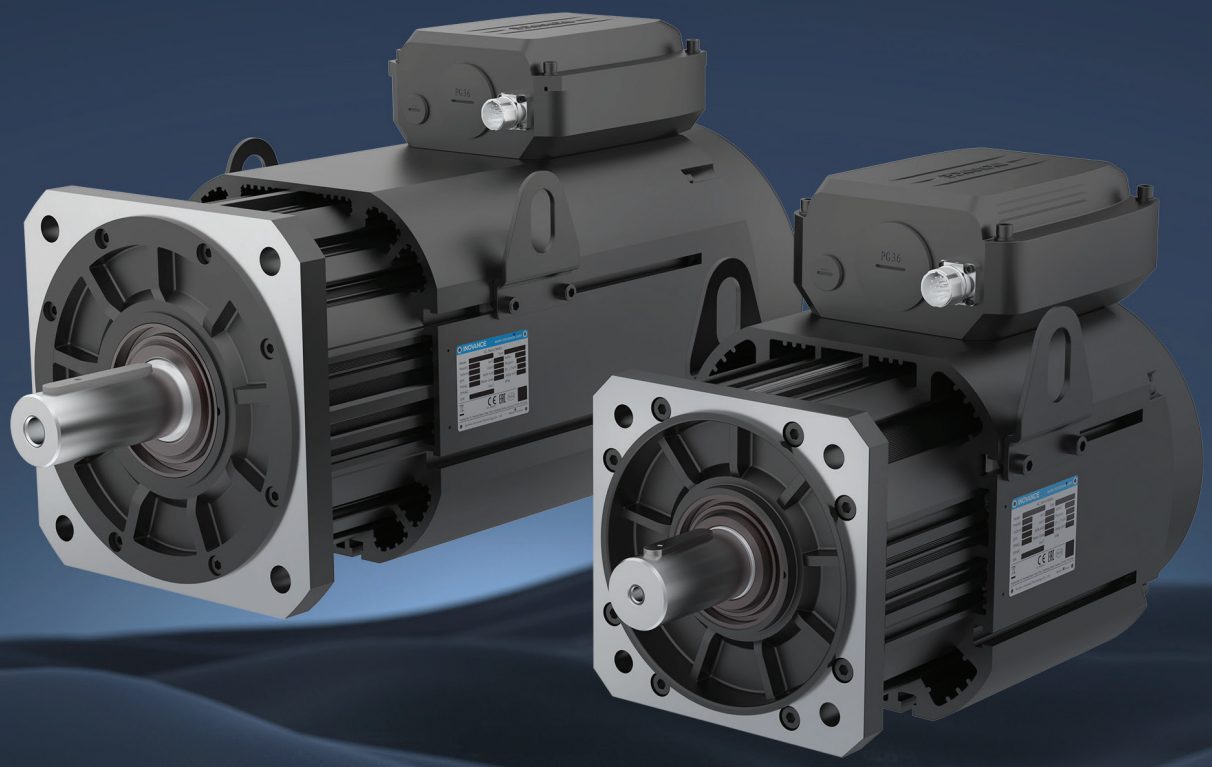

Features

- Industry-leading interior permanent magnet (IPM) technology, avoiding demagnetization while ensuring small current and low temperature rise
- Integrated air duct housing, significantly enhancing mechanical structural strength
- Unique encoder shock-resistant structure, achieving a shock resistance rating of 5·g
- Electromagnetic and structural optimization, reducing high-frequency and mechanical noise to industry-leading levels
- High overload capacity, meeting high-response and high-overload demands of all-electric applications

Naming Convention

MEG	20	-	13D	22C	D	-	A3	A	1	F	-	E
①	②		③	④	⑤		⑥	⑦	⑧	⑨		⑩

① Product series

MEG: Dedicated servo motor

② Flange size

20: 200 x 200

23: 266 x 266

③ Rated power

A: x 1

B: x 10

C: x 100

D: x 1000

E: x 10000

Example: 13D means 13000 W.

④ Rated speed

A: x 1

B: x 10

C: x 100

D: x 1000

E: x 10000

Example: 22C means 2200 rpm.

⑤ Voltage class

D: 380 V

⑥ Encoder type

A3: 23-bit multi-turn absolute encoder

⑦ Shaft connection mode

1: Plain shaft

3: Solid, with key, with tapped hole

6: Cone shaft, with key

A: Solid, with key, with threaded hole, with embedded rotor

B: Embedded plain shaft

C: Embedded cone shaft, with key

⑧ Brake, reducer, and oil seal

1: Oil seal

4: Oil seal+brake

⑨ Cooling method

F: Forced air cooling

⑩ Industry-specific motor

E: Specific to all-electric injection molding

⑪ Additional information

00: Standard motor

Omitted: Customized

Outline Dimensions

■ MEG20-*******-A3A1F-E servo motor

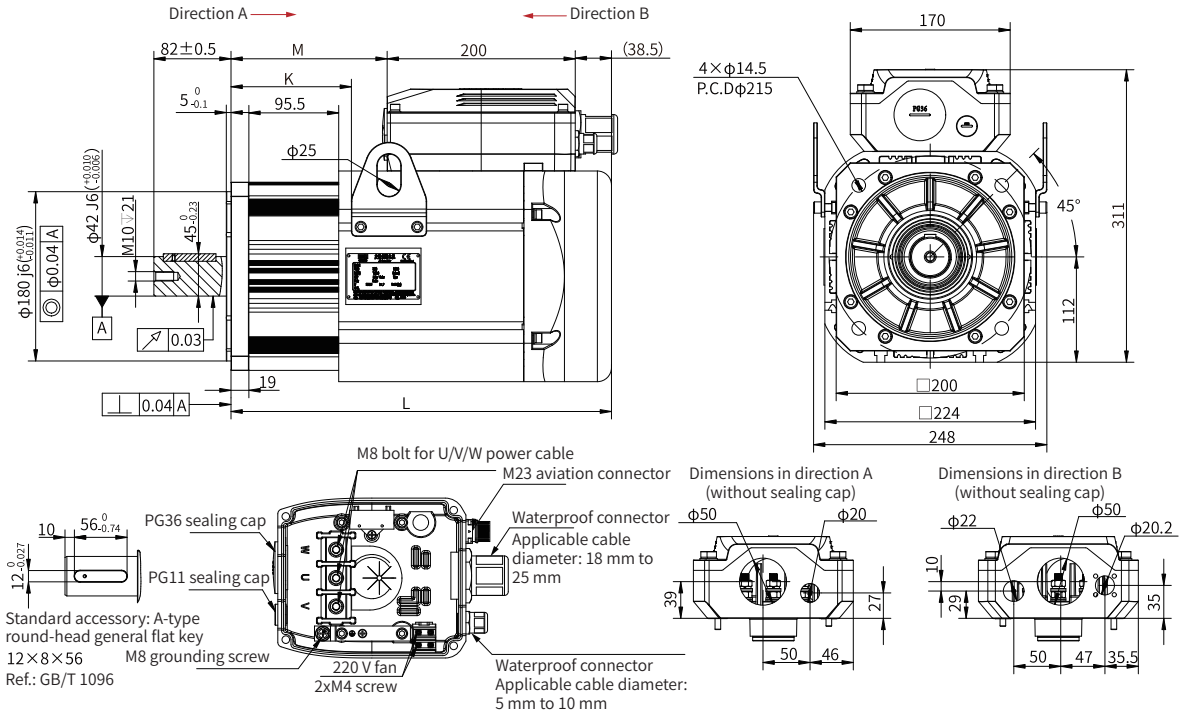

Model	L (mm)	K (mm)	M (mm)	Mass (kg)
MEG20-71C17CD-A3A1F-E	319	115	80.5	28.7
MEG20-61C10CD-A3A1F-E	347.5	115	109	33.7
MEG20-11D17CD-A3A1F-E				
MEG20-13D22CD-A3A1F-E				
MEG20-87C10CD-A3A1F-E	376	120	137.5	40.2
MEG20-17D17CD-A3A1F-E				
MEG20-20D22CD-A3A1F-E				
MEG20-10D10CD-A3A1F-E	404.5	128	166	45
MEG20-19D17CD-A3A1F-E				
MEG20-23D22CD-A3A1F-E				
MEG20-12D10CD-A3A1F-E	433	135	194.5	50.3
MEG20-23D17CD-A3A1F-E				
MEG20-27D22CD-A3A1F-E				
MEG20-15D10CD-A3A1F-E	490	162	251.5	62
MEG20-29D17CD-A3A1F-E				
MEG20-33D22CD-A3A1F-E				
MEG20-19D10CD-A3A1F-E	518.5	180	280	68.2
MEG20-32D17CD-A3A1F-E				

MEG23-*******-A3A1F-E servo motor

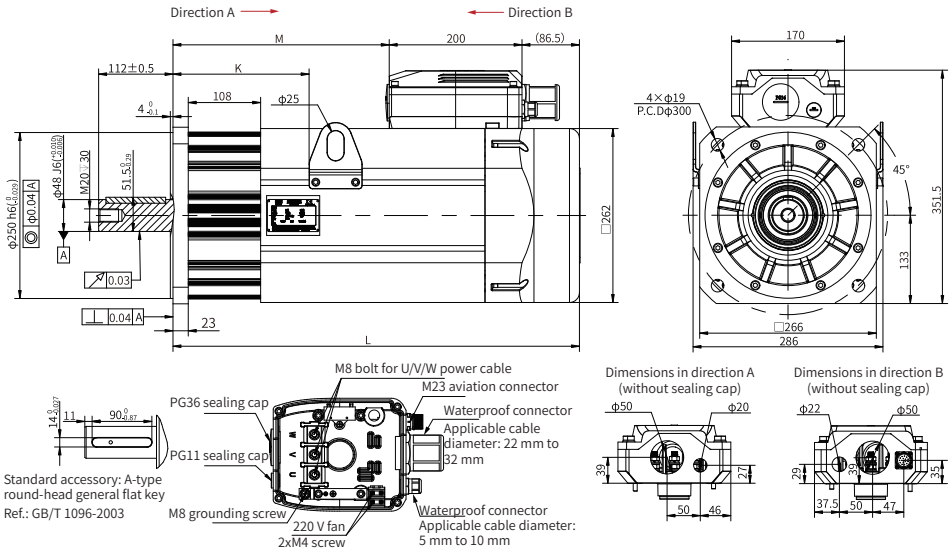

Model	L (mm)	K (mm)	M (mm)	Mass (kg)
MEG23-24D10CD-A3A1F-E	567.7	188	281.2	91.8
MEG23-41D17CD-A3A1F-E				
MEG23-51D22CD-A3A1F-E				
MEG23-28D10CD-A3A1F-E	612.2	205	325.7	103.3
MEG23-48D17CD-A3A1F-E				
MEG23-55D22CD-A3A1F-E				
MEG23-32D10CD-A3A1F-E	656.7	223	370.2	115.8
MEG23-55D17CD-A3A1F-E				
MEG23-34D10CD-A3A1F-E	701.2	240	414.7	126.8
MEG23-59D17CD-A3A1F-E				

Product Specifications

MEG20 Series

■ 200 x 200 flange; 1000 rpm

Specification		Unit	Model: MEG20-XXX10CD-A3A1F-E					
			61C10CD	87C10CD	10D10CD	12D10CD	15D10CD	19D10CD
Rated voltage	U_N	V	380					
Rated current	I_N	A	14	19.8	24	27.4	32	40.8
Rated speed	n_N	rpm	1000					
Rated frequency	f_N	Hz	66.67					
Rated torque	T_N	N·m	58	83	96	116	142	178
Rated power	P_N	kW	6.1	8.7	10.1	12.1	14.9	18.6
Rated point efficiency	η	%	89.6	90.3	91.3	91.2	91.8	91.5
Power at 65 K	P (65 K)	kW	5.24	7.12	9.42	10.99	13.61	14.66
Torque at 65 K	T (65 K)	N·m	50	68	90	105	130	140
Current at 65 K	I (65 K)	A	11.5	16	21.5	24.6	29.2	32
Max speed	N_{max}	rpm	1500					
Torque at max speed	$T_{N\cdot max}$	N·m	90	130	165	209	271	310
Peak current	I_{max}	A	32.5	42.5	52	62.5	80	92.5
Peak torque	T_{max}	N·m	140	173	210	250	350	400
Speed at peak torque inflection point	$n_{T\cdot max}$	rpm	1000					
Peak current at rated speed	$I_{N\cdot max}$	A	32.5	42.5	52	62.5	80	92.5
Peak torque at rated speed	$T_{N\cdot max}$	N·m	140	173	210	250	350	400
D-axis incremental inductance	L_d	mH	11.25	7.58	6.04	4.9	4.14	3.52
Q-axis incremental inductance	L_q	mH	24.27	16.99	14.04	11.64	9.99	8.42
Line resistance at 20° C	R_w	Ω	1.809	1.075	0.75	0.6434	0.4762	0.3943
Torque constant at 20° C	K_t	N·m/A	4.73	4.51	4.43	4.51	4.73	4.66
Back EMF constant at 20° C	K_e	V/kRPM	286	272.4	268	272.4	286.1	281.6
Back EMF temperature coefficient	dK_e/dT	%/° C	-0.1					
Hot-state torque constant	Kt (100 K)	N·m/A	4.26	4.06	3.99	4.06	4.26	4.19
Number of poles	P	-	8					
Locked-rotor current	I_0	A	18.2	25.74	31.2	35.62	41.6	53.04
Locked-rotor torque	T_0	N·m	75.4	107.9	124.8	150.8	184.6	231.4
Motor mass	m	kg	33.7	40.2	45	50.3	62	68.2
Rotor moment of inertia	J_m	kg·cm²	90	111	132	152	194	215
Fan type	-	-	Single-phase capacitor-driven centrifugal fan					
Rated fan voltage	-	VAC	230					
Fan frequency	-	Hz	50/60					
Fan current	-	A	0.23/0.24					

200 x 200 flange; 1700 rpm

Specification		Unit	Model: MEG20-XXX17CD-A3A1F-E						
			71C17CD	11D17CD	17D17CD	19D17CD	23D17CD	29D17CD	32D17CD
Rated voltage	U_N	V	380						
Rated current	I_N	A	13	19.5	27.4	30	36.8	45.5	48.8
Rated speed	n_N	rpm	1700	1700	1700	1700	1700	1700	1700
Rated frequency	f_N	Hz	113.33						
Rated torque	T_N	N·m	40	61	93	107	125	158	178
Rated power	P_N	kW	7.1	10.9	16.6	19	22.3	28.1	31.7
Rated point efficiency	η	%	91.4	92.1	93.1	93.2	93.4	94.2	95.1
Power at 65 K	P (65 K)	kW	6.6	8.7	10.9	14.1	17.6	22.5	25.3
Torque at 65 K	T (65 K)	N·m	37	49	61	79	99	126.4	142.4
Current at 65 K	I (65 K)	A	11.5	15	17.7	22.3	28.7	35.5	38.1
Max speed	N_{max}	rpm	2500						
Torque at max speed	$T_{N\cdot max}$	N·m	43.7	63	92.6	110.3	142.4	202.3	191.8
Peak current	I_{max}	A	55	77	110	113	130	155	156
Peak torque	T_{max}	N·m	120	183	279	321	375	474	534
Speed at peak torque inflection point	$n_{T\cdot max}$	rpm	1000						
Peak current at rated speed	$I_{N\cdot max}$	A	55	77	110	113	130	155	156
Peak torque at rated speed	$T_{N\cdot max}$	N·m	83	115	160	190	260	340	360
D-axis incremental inductance	L_d	mH	10.44	7.3	4.997	4.477	3.199	2.391	2.908
Q-axis incremental inductance	L_q	mH	21.37	16.08	11.15	9.883	7.538	5.416	6.69
Line resistance at 20° C	R_w	Ω	1.704	1.128	0.659	0.5837	0.3825	0.2813	0.2974
Torque constant at 20° C	K_t	N·m/A	3.44	3.54	3.54	3.74	3.54	3.52	3.92
Back EMF constant at 20° C	K_e	V/kRPM	208	214	214	226	214	213	237
Back EMF temperature coefficient	dK_e/dT	%/° C	-0.1						
Hot-state torque constant	Kt (100 K)	N·m/A	3.1	3.19	3.19	3.37	3.19	3.17	3.53
Number of poles	P	-	8						
Locked-rotor current	I_O	A	15.4	22.5	30.6	36.7	42.6	54.3	58.7
Locked-rotor torque	T_O	N·m	47.6	70.7	103.9	131.2	145	188.9	214.3
Motor mass	m	kg	28.7	33.7	40.2	45	50.3	62	68.2
Rotor moment of inertia	J_m	kg·cm²	70	90	111	132	152	194	215
Fan type	-	-	Single-phase capacitor-driven centrifugal fan						
Rated fan voltage	-	VAC	230						
Fan frequency	-	Hz	50/60						
Fan current	-	A	0.23/0.24						

200 x 200 flange; 2200 rpm

Specification		Unit	Model: MEG20-XXX22CD-A3A1F-E				
			13D22CD	20D22CD	23D22CD	27D22CD	33D22CD
Rated voltage	U_N	V	380				
Rated current	I_N	A	13	19.5	27.4	30	36.8
Rated speed	n_N	rpm	1700	1700	1700	1700	1700
Rated frequency	f_N	Hz	113.33				
Rated torque	T_N	N·m	40	61	93	107	125
Rated power	P_N	kW	7.1	10.9	16.6	19	22.3
Rated point efficiency	η	%	91.4	92.1	93.1	93.2	93.4
Power at 65 K	P (65 K)	kW	6.6	8.7	10.9	14.1	17.6
Torque at 65 K	T (65 K)	N·m	37	49	61	79	99
Current at 65 K	I (65 K)	A	11.5	15	17.7	22.3	28.7
Max speed	N_{max}	rpm	2500				
Torque at max speed	$T_{N\cdot max}$	N·m	43.7	63	92.6	110.3	142.4
Peak current	I_{max}	A	55	77	110	113	130
Peak torque	T_{max}	N·m	120	183	279	321	375
Speed at peak torque inflection point	$n_{T\cdot max}$	rpm	1000				
Peak current at rated speed	$I_{N\cdot max}$	A	55	77	110	113	130
Peak torque at rated speed	$T_{N\cdot max}$	N·m	83	115	160	190	260
D-axis incremental inductance	L_d	mH	10.44	7.3	4.997	4.477	3.199
Q-axis incremental inductance	L_q	mH	21.37	16.08	11.15	9.883	7.538
Line resistance at 20° C	R_w	Ω	1.704	1.128	0.659	0.5837	0.3825
Torque constant at 20° C	K_t	N·m/A	3.44	3.54	3.54	3.74	3.54
Back EMF constant at 20° C	K_e	V/kRPM	208	214	214	226	214
Back EMF temperature coefficient	dK_e/dT	%/° C	-0.1				
Hot-state torque constant	Kt (100 K)	N·m/A	3.1	3.19	3.19	3.37	3.19
Number of poles	P	-	8				
Locked-rotor current	I_0	A	15.4	22.5	30.6	36.7	42.6
Locked-rotor torque	T_0	N·m	47.6	70.7	103.9	131.2	145
Motor mass	m	kg	28.7	33.7	40.2	45	50.3
Rotor moment of inertia	J_m	kg·cm²	70	90	111	132	152
Fan type	-	-	Single-phase capacitor-driven centrifugal fan				
Rated fan voltage	-	VAC	230				
Fan frequency	-	Hz	50/60				
Fan current	-	A	0.23/0.24				

MEG23 Series

266 x 266 flange; 1000 rpm

Specification		Unit	Model: MEG23-XXX10CD-A3A1F-E			
			24D10CD	28D10CD	32D10CD	34D10CD
Rated voltage	U_N	V	380			
Rated current	I_N	A	68	68.3	77.6	80.6
Rated speed	n_N	rpm	1000	1000	1000	1000
Rated frequency	f_N	Hz	66.67	66.67	66.67	66.67
Rated torque	T_N	N·m	233	268	305	325
Rated power	P_N	kW	24.4	28.1	31.9	34
Rated point efficiency	η	%	93.3	92.2	92.5	92.6
Power at 65 K	P (65 K)	kW	21.99	25.65	30.16	30.89
Torque at 65 K	T (65 K)	N·m	210	245	288	295
Current at 65 K	I (65 K)	A	58.6	62.5	73	75
Max speed	N_{max}	rpm	1500			
Torque at max speed	$T_{N\cdot max}$	N·m	370	420	485	540
Peak current	I_{max}	A	130	150	187.5	187.5
Peak torque	T_{max}	N·m	460	580	720	755
Speed at peak torque inflection point	$n_{T\cdot max}$	rpm	900			
Peak current at rated speed	$I_{N\cdot max}$	A	130	150	187.5	187.5
Peak torque at rated speed	$T_{N\cdot max}$	N·m	460	580	720	755
D-axis incremental inductance	L_d	mH	2.8	2.84	2.46	2.25
Q-axis incremental inductance	L_q	mH	5.2	5.27	4.6	4.26
Line resistance at 20° C	R_w	Ω	0.221	0.2115	0.1754	0.1521
Torque constant at 20° C	K_t	N·m/A	3.75	4.14	4.17	4.26
Back EMF constant at 20° C	K_e	V/kRPM	227	250.2	252	257.7
Back EMF temperature coefficient	dK_e/dT	%/° C	-0.1			
Hot-state torque constant	Kt (100 K)	N·m/A	3.38	3.73	3.75	3.83
Number of poles	P	-	8			
Locked-rotor current	I_0	A	88.4	88.79	100.88	104.78
Locked-rotor torque	T_0	N·m	302.9	348.4	396.5	422.5
Motor mass	m	kg	91.8	103.3	115.8	126.8
Rotor moment of inertia	J_m	kg·cm²	375	427	479	531
Fan type	-	-	Single-phase capacitor-driven centrifugal fan			
Rated fan voltage	-	VAC	230			
Fan frequency	-	Hz	50/60			
Fan current	-	A	0.59/0.80			

266 x 266 flange; 1700 rpm

Specification		Unit	Model: MEG23-XXX17CD-A3A1F-E			
			41D17CD	48D17CD	55D17CD	59D17CD
Rated voltage	U_N	V	380			
Rated current	I_N	A	70.8	79.5	88.4	99.7
Rated speed	n_N	rpm	1700	1700	1700	1700
Rated frequency	f_N	Hz	113.33	113.33	113.33	113.33
Rated torque	T_N	N·m	233	268	305	325
Rated power	P_N	kW	41.4	47.7	54.3	57.8
Rated point efficiency	η	%	95.2	95.4	95.5	95.6
Power at 65 K	P (65 K)	kW	33.2	38.2	43.4	46.3
Torque at 65 K	T (65 K)	N·m	186.4	214.4	244	260
Current at 65 K	I (65 K)	A	55.2	62	69	77.8
Max speed	N_{max}	rpm	2500			
Torque at max speed	$T_{N\cdot max}$	N·m	208.8	237.4	264.4	318.7
Peak current	I_{max}	A	272	285	300	320
Peak torque	T_{max}	N·m	699	804	915	975
Speed at peak torque inflection point	$n_{T\cdot max}$	rpm	900			
Peak current at rated speed	$I_{N\cdot max}$	A	272	285	300	320
Peak torque at rated speed	$T_{N\cdot max}$	N·m	380	440	490	610
D-axis incremental inductance	L_d	mH	2.585	2.31	2.234	1.723
Q-axis incremental inductance	L_q	mH	4.419	3.901	3.899	2.978
Line resistance at 20° C	R_w	Ω	0.1895	0.1619	0.138	0.1128
Torque constant at 20° C	K_t	N·m/A	3.51	3.51	3.8	3.46
Back EMF constant at 20° C	K_e	V/kRPM	212.5	212	229.9	209.2
Back EMF temperature coefficient	dK_e/dT	%/° C	-0.1			
Hot-state torque constant	Kt (100 K)	N·m/A	3.16	3.16	3.42	3.11
Number of poles	P	-	8			
Locked-rotor current	I_0	A	85.1	95.5	106.5	117.6
Locked-rotor torque	T_0	N·m	279.9	322.2	367.6	383.5
Motor mass	m	kg	91.8	103.3	115.8	126.8
Rotor moment of inertia	J_m	kg·cm²	375	427	479	531
Fan type	-	-	Single-phase capacitor-driven centrifugal fan			
Rated fan voltage	-	VAC	230			
Fan frequency	-	Hz	50/60			
Fan current	-	A	0.59/0.80			

266 x 266 flange; 2200 rpm

Specification		Unit	Model: MEG23-XXX22CD-A3A1F-E	
			51D22CD	55D22CD
Rated voltage	U_N	V	380	
Rated current	I_N	A	88	92.5
Rated speed	n_N	rpm	2200	2200
Rated frequency	f_N	Hz	146.67	146.67
Rated torque	T_N	N·m	220	240
Rated power	P_N	kW	50.7	55.3
Rated point efficiency	η	%	95.2	95.4
Power at 65 K	P (65 K)	kW	40.5	44.2
Torque at 65 K	T (65 K)	N·m	176	192
Current at 65 K	I (65 K)	A	68.6	72.2
Max speed	N_{max}	rpm	3000	
Torque at max speed	$T_{N\cdot max}$	N·m	244.1	303.6
Peak current	I_{max}	A	300	300
Peak torque	T_{max}	N·m	660	720
Speed at peak torque inflection point	$n_{T\cdot max}$	rpm	1300	
Peak current at rated speed	$I_{N\cdot max}$	A	300	300
Peak torque at rated speed	$T_{N\cdot max}$	N·m	380	430
D-axis incremental inductance	L_d	mH	1.54	1.458
Q-axis incremental inductance	L_q	mH	2.729	2.48
Line resistance at 20° C	R_w	Ω	0.1098	0.09942
Torque constant at 20° C	K_t	N·m/A	2.72	2.76
Back EMF constant at 20° C	K_e	V/kRPM	164	167
Back EMF temperature coefficient	dK_e/dT	%/° C	-0.1	
Hot-state torque constant	Kt (100 K)	N·m/A	2.45	2.48
Number of poles	P	-	8	
Locked-rotor current	I_0	A	98	109
Locked-rotor torque	T_0	N·m	248	283
Motor mass	m	kg	91.8	103.3
Rotor moment of inertia	J_m	kg·cm²	375	427
Fan type	-	-	Single-phase capacitor-driven centrifugal fan	
Rated fan voltage	-	VAC	230	
Fan frequency	-	Hz	50/60	
Fan current	-	A	0.59/0.80	

High-Load Ball Screw

HSP & HSL Series Ball Screw

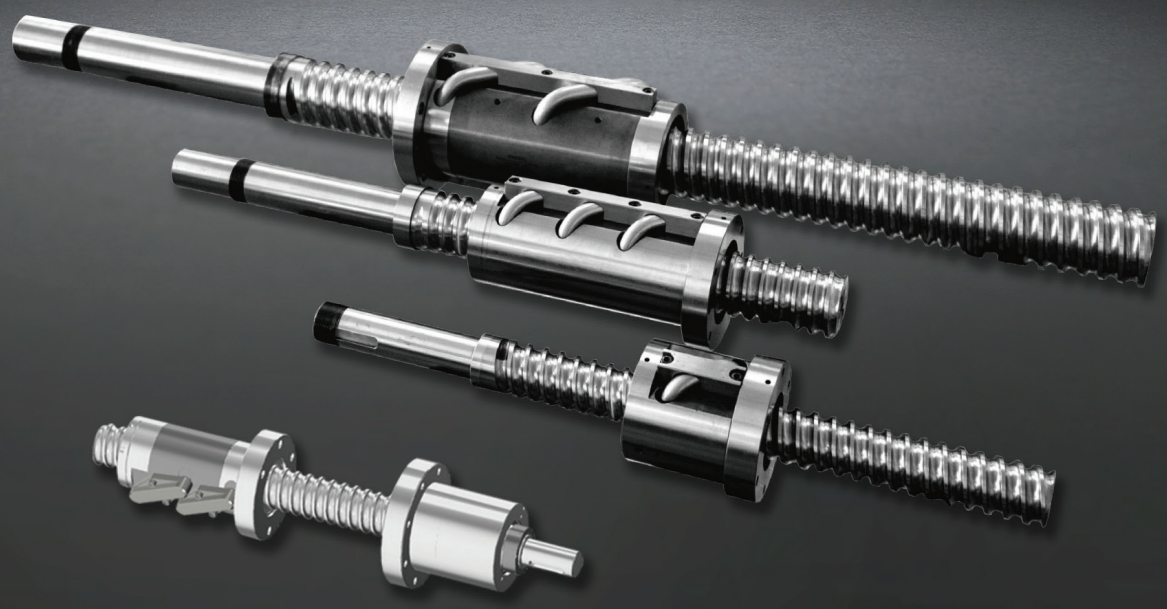

Features

- Unique high-load groove design to significantly improve load capacity and lifespan
- Tangential reverse structure along the helix to achieve a DN value of up to 150,000
- Ball retainer to reduce steel ball collisions during high-speed operation, effectively minimizing torque fluctuation and noise
- High-performance sealing ring to effectively prevent grease leakage
- Integrated ball screw and bearing block solution available
- Backed by over 20 years of industry application experience with Lai'en

Naming Convention

HSL	A	80	50	F	2	Q	825L	70	C7	L	S	+	60	DBD	1	0
①	②	③	④	⑤	⑥	⑦	⑧	⑨	⑩	⑪	⑫		⑬	⑭	⑮	⑯

① Ball screw series code
- PBS: High-load ball screw
- HSP: High-speed, high-load ball screw
- HSL: High-speed, large-lead ball screw
- HPL: High-speed, large-lead screw

② Special design mark
- K: Ball screw with retainer
- B: Ball screw with bearing-integrated nut
- A: Ball screw for electric actuators

③ Nominal outer diameter (mm)

④ Lead (mm)

⑤ Nut type mark
- A: Single square nut
- B: Double square nut
- C: Single flange double nut
- D: Double round nut
- F: Single flange single nut
- S: Single round nut
- Z: Special-shape nut

⑥ Number of thread grooves
- Blank: One
- 2: Two
- 3: Three

⑦ Loops (Turns x Rows)
- A: 2.5 x 1
- B: 3.5 x 1
- C: 2.5 x 2
- D: 2.5 x 2
- E: 1.5 x 1
- F: 1.5 x 2
- G: 1.5 x 3
- H: 1.5 x 4
- J: 3.5 x 2
- K: 2.5 x 4
- N: 3.5 x 3
- Y: 3.5 x 4
- P: 1.7 x 1
- Q: 2.7 x 1
- M: 3.7 x 1
- Z: 4.7 x 1
- X: Others

⑧ Total screw length (mm)

⑨ Additional model

⑩ Accuracy class

⑪ Thread rotation direction
- Blank: Right-hand thread
- L: Left-hand thread

⑫ Preload mode
- Blank: Other preload
- A: Oversized spacer ball preload
- B: Full preload
- D: Oversized ball preload
- S: With specified grease

⑬ Bearing bore diameter

⑭ Bearing arrangement
- DBD: 2+1
- DB: 1+1
- DBB: 2+2
- DBTD: 4+1
- DBT: 3+1

⑮ Applicable industry
- 1: Injection molding machines
- 2: Presses and bending machines

⑯ Reserved bit

Outline Dimensions

■ HSP Series

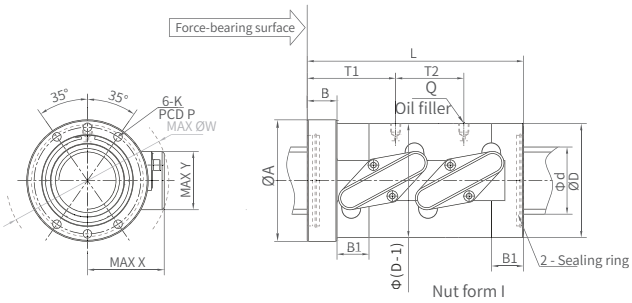

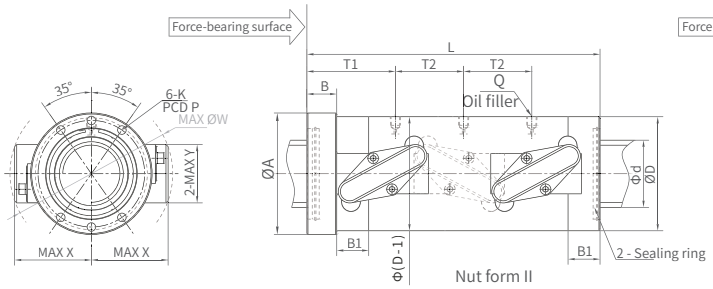

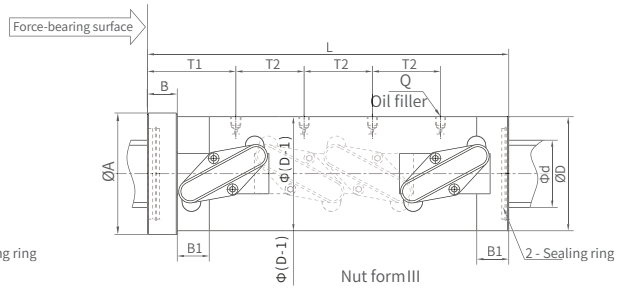

Model	Nut Type	Ball Screwb Threaded Hole Size (mm)												
		A	B	B1	D	L	K	T1	T2	P	Q	X	Y	W
HSP5010FD	II	90	18	30	75	143	M8	51	30	78	Rc1/8	49	45	99
HSP5014FD	II	114	28	30	95	202	M8	69	42	97	Rc1/8	54	46	110
HSP5016FC	I	100	28	30	95	164	M8	66.5	48	86	Rc1/8	66	50	134
HSP5016FD	II	100	28	30	95	228	M8	66.5	48	86	Rc1/8	66	50	134
HSP5020FD	II	129	28	30	95	268	M8	83.5	60	112	Rc1/8	66	50	134
HSP6312FK	III	114	28	30	92	210	M8	69	36	100	Rc1/8	61	53	131
HSP6316FD	II	114	28	30	105	228	M8	68	48	100	Rc1/8	72.5	50	148
HSP6316FN	II	114	28	30	105	275	M8	83	64	100	Rc1/8	72.5	56	155
HSP6316FY	III	114	28	30	105	339	M8	83	64	100	Rc1/8	72.5	56	155
HSP6320FD	II	125	32	30	117	272	M10	80	60	105	Rc1/8	80	62	167
HSP6320FK	III	125	32	30	117	332	M10	80	60	105	Rc1/8	80	62	167
HSP6325FJ	I	140	35	30	117	275	M10	92	100	120	Rc1/8	81.5	55	171
HSP6325FN	II	140	35	30	117	400	M10	92	100	120	Rc1/8	81.5	55	171
HSP8016FD	II	130	30	30	115	224	M8	68	48	115	Rc1/8	68	64	147
HSP8016FJ	I	143	37	30	120	202	M10	92	64	124	Rc1/8	78	60	165
HSP8016FN	II	143	37	30	120	282	M10	92	64	124	Rc1/8	78	60	165
HSP8016FY	III	143	37	30	120	346	M10	92	64	124	Rc1/8	78	60	165
HSP8020FJ	I	143	37	40	130	244	M10	105.5	80	124	Rc1/8	88	64	187
HSP8020FN	II	143	37	40	130	344	M10	105.5	80	124	Rc1/8	88	64	187
HSP8020FY	III	143	37	40	130	424	M10	105.5	80	124	Rc1/8	88	64	187
HSP8025FD	II	150	40	40	145	333	M10	99	75	131	Rc1/8	97	72	203
HSP8025FK	III	150	40	40	145	408	M10	99	75	131	Rc1/8	97	72	203
HPL8050F2B	II	225	40	40	165	290	M16	238.5	/	190	Rc1/8	99	82	205
HSP10016FD	II	160	40	40	145	235	M10	79.5	48	140	Rc1/8	89	77	192
HSP10016FK	III	160	40	40	145	283	M10	79.5	48	140	Rc1/8	89	77	192
HSP10016FN	II	160	40	40	145	288	M10	96	64	140	Rc1/8	87	77	190
HSP10016FY	III	160	40	40	145	352	M10	96	64	140	Rc1/8	87	77	190
HSP10020FN	II	168	40	40	145	343	M10	107	80	144	Rc1/8	97	78	206
HSP10020FY	III	168	40	40	145	423	M10	107	80	144	Rc1/8	97	78	206
HSP10025FJ	I	180	40	40	159	293	M12	123.5	100	160	Rc1/8	108	81	228
HSP10025FN	II	180	40	40	159	418	M12	123.5	100	160	Rc1/8	108	81	228
HSP10025FY	III	180	40	40	159	518	M12	123.5	100	160	Rc1/8	108	81	228
HPL10050F2C	II	223	32	40	165	381	M16	156.5	150	190	Rc1/8	105	86	221
HSP12020FD	II	185	40	40	173	285	M12	92.5	60	163	Rc1/8	107	88	227
HSP12020FK	III	185	40	40	173	345	M12	92.5	60	163	Rc1/8	107	88	227
HSP12025FN	II	188	40	40	173	420	M12	123.5	100	169	Rc1/8	115	92	245
HSP12025FY	III	188	40	40	173	520	M12	123.5	100	169	Rc1/8	115	92	245
HPL14070F2C	II	306	70	50	238	575	M20	189.5	210	275	Rc1/8	144	120	308

■ HSL Series

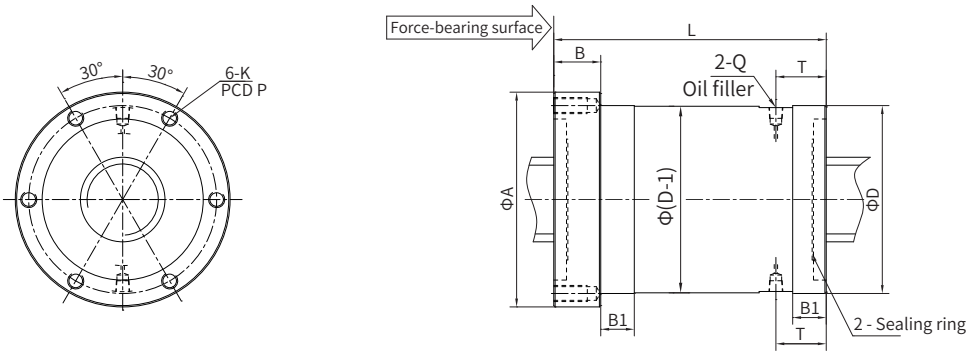

Model	Ball Screwb Threaded Hole Size (mm)								
	A	B	B1	D	L	K	T	P	Q
HSL5032F2P	96	20	25	94	97	M8	12	82	Rc1/8
HSL5032F2P	116	20	25	114	106	M10	19	98	Rc1/8
HSL5032F2Q	116	20	25	114	138	M10	19	98	Rc1/8
HSL5040F2P	165	30	25	115	119	M12	45.5	140	Rc1/8
HSL5040F2Q	165	30	25	115	159	M12	45.5	140	Rc1/8
HSL5040F2M	165	30	25	115	199	M12	45.5	140	Rc1/8
HSL5050F2Q	165	30	25	115	187	M12	46	140	Rc1/8
HSL5050F2M	165	30	25	115	237	M12	46	140	Rc1/8
HSL6332F2Q	190	32	30	140	164	M12	47	165	Rc1/8
HSL6332F2M	190	32	30	140	196	M12	47	165	Rc1/8
HSL6340F2P	160	35	30	140	123	M12	50	140	Rc1/8
HSL6340F2Q	160	35	30	140	163	M12	50	140	Rc1/8
HSL6340F2M	160	35	30	140	203	M12	50	140	Rc1/8
HSL8040F2Q	198	35	40	160	163	M12	51.5	178	Rc1/8
HSL8040F2M	198	35	40	160	203	M12	51.5	178	Rc1/8
HSL8050F2Q	250	40	40	175	186	M20	63	210	Rc1/8
HSL8050F2M	250	40	40	175	236	M20	63	210	Rc1/8
HSL12570F2Z	277	40	40	216	398	M20	155.3	245	Rc1/8

Product Specifications

■ HSP Series

Model	Nominal Outer Diameter of Shaft (d)	Nominal Lead (Ph)	Nut Type	Loops (Turns x Rows x Grooves)	Basic Rated Load (kN)		Allowed Axial Load* (kN)
					Rated Dynamic Load (Ca)	Rated Static Load (Coa)	
HSP5010FD	50	10	II	2.5 x 3 x 1	173	510	69.8
HSP5014FD		14	II	2.5 x 3 x 1	256	685	96.0
HSP5016FC		16	I	2.5 x 2 x 1	261	605	80.4
HSP5016FD		16	II	2.5 x 3 x 1	370	910	120.1
HSP5020FD		20	II	2.5 x 3 x 1	370	910	119.6
HSP6312FK	63	12	III	2.5 x 4 x 1	325	1060	139.4
HSP6316FD		16	II	2.5 x 3 x 1	420	1150	158.4
HSP6316FN		16	II	3.5 x 3 x 1	545	1570	216.6
HSP6316FY		16	III	3.5 x 4 x 1	700	2090	235.2
HSP6320FD		20	II	2.5 x 3 x 1	555	1420	191.1
HSP6320FK		20	III	2.5 x 4 x 1	710	1900	226.4
HSP6325FJ		25	I	3.5 x 2 x 1	510	1300	174.0
HSP6325FN		25	II	3.5 x 3 x 1	725	1950	261.2

Model	Nominal Outer Diameter of Shaft (d)	Nominal Lead (Ph)	Nut Type	Loops (Turns x Rows x Grooves)	Basic Rated Load (kN)		Allowed Axial Load* (kN)
					Rated Dynamic Load (Ca)	Rated Static Load (Coa)	
HSP8016FD	80	16	II	2.5 x 3 x 1	320	1120	144.1
HSP8016FJ		16	I	3.5 x 2 x 1	430	1330	180.3
HSP8016FN		16	II	3.5 x 3 x 1	610	1990	269.5
HSP8016FY		16	III	3.5 x 4 x 1	785	2650	360.6
HSP8020FJ		20	I	3.5 x 2 x 1	575	1630	227.4
HSP8020FN		20	II	3.5 x 3 x 1	815	2450	341
HSP8020FY		20	III	3.5 x 4 x 1	1040	3250	454.7
HSP8025FD		25	II	2.5 x 3 x 1	805	2220	284.2
HSP8025FK		25	III	2.5 x 4 x 1	1030	2960	379
HPL8050F2B		50	II	3.5 x 1 x 2	730	2000	266.6
HSP10016FD	100	16	II	2.5 x 3 x 1	520	1840	241.1
HSP10016FK		16	III	2.5 x 4 x 1	665	2450	321.4
HSP10016FN		16	II	3.5 x 3 x 1	680	2520	328.1
HSP10016FY		16	III	3.5 x 4 x 1	870	3350	437.4
HSP10020FN		20	II	3.5 x 3 x 1	915	3100	420.4
HSP10020FY		20	III	3.5 x 4 x 1	1170	4150	560.6
HSP10025FJ		25	I	3.5 x 2 x 1	825	2510	343
HSP10025FN		25	II	3.5 x 3 x 1	1170	3750	514.5
HSP10025FY		25	III	3.5 x 4 x 1	1500	5000	686
HPL10050F2C		50	II	2.5 x 2 x 2	1130	3650	485
HSP12020FD	120	20	II	2.5 x 3 x 1	760	2750	359.7
HSP12020FK		20	III	2.5 x 4 x 1	975	3650	480.2
HSP12025FN		25	II	3.5 x 3 x 1	1270	4500	602.7
HSP12025FY		25	III	3.5 x 4 x 1	1630	5950	803.6
HPL14070F2C	140	70	II	2.5 x 2 x 2	1830	6350	900

HSL Series

Model	Nominal Outer Diameter of Shaft (d)	Nominal Lead (Ph)	Loops (Turns x Rows x Grooves)	Basic Rated Load (kN)		Allowed Axial Load* (kN)
				Rated Dynamic Load (Ca)	Rated Static Load (Coa)	
HSL5032F2P	50	32	1.7 x 1 x 2	119	284	40.2
HSL5032F2P		32	1.7 x 1 x 2	172	375	50
HSL5032F2Q		32	2.7 x 1 x 2	257	600	82.3
HSL5040F2P		40	1.7 x 1 x 2	170	375	52.4
HSL5040F2Q		40	2.7 x 1 x 2	253	595	82.3
HSL5040F2M		40	3.7 x 1 x 2	330	815	114.2
HSL5050F2Q		50	2.7 x 1 x 2	249	585	84.8
HSL5050F2M		50	3.7 x 1 x 2	325	800	114.2
HSL6332F2Q	63	32	2.7 x 1 x 2	291	755	105.8
HSL6332F2M		32	3.7 x 1 x 2	380	1040	147
HSL6340F2P		40	1.7 x 1 x 2	258	590	78.4
HSL6340F2Q		40	2.7 x 1 x 2	385	935	127.4
HSL6340F2M		40	3.7 x 1 x 2	505	1280	176.4
HSL8040F2Q	80	40	2.7 x 1 x 2	435	1180	167.6
HSL8040F2M		40	3.7 x 1 x 2	570	1620	231.3
HSL8050F2Q		50	2.7 x 1 x 2	560	1460	195.0
HSL8050F2M		50	3.7 x 1 x 2	730	2000	266.6
HSL12570F2Z	125	70	4.7 x 1 x 2	1120	4000	540

Ring Force Transducer

EFYH Series Ring Force Transducer

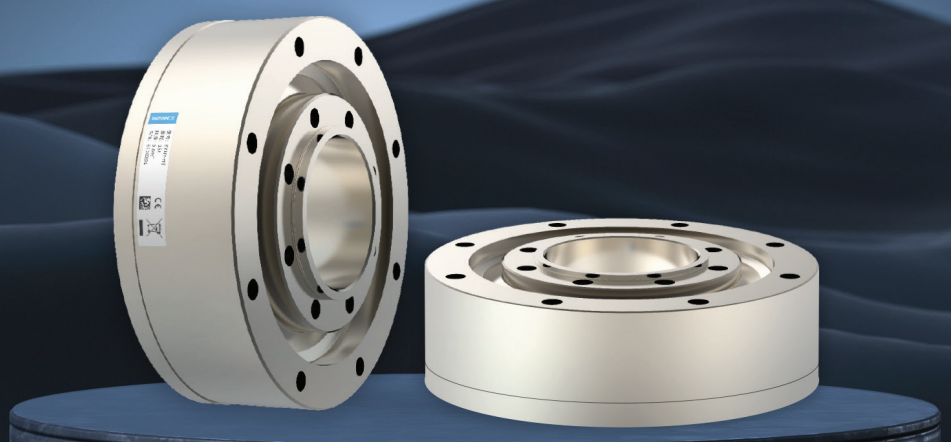

Features

- Twice as fast response rate, ensuring stable system operation
- Stable injection with high precision, doubling key performance indicators
- Dual redundant outputs, enabling minute-level fault recovery
- Adjustable range to handle various scenarios
- Fully proprietary design optimized using mathematical function algorithms, finite element analysis, and 3D simulation modeling

Naming Convention

EFYH	-	20T	U	-	H	M5	-	_	-*
①		②	③		④	⑤		⑥	⑦

① Ring force transducer	③ Output mode A: 4 mA to 20 mA current U: 0 V to 10 V voltage H: RS485 ML: EtherCAT	⑤ Cable/Connector R: PUR cable C: PVC cable S: Twisted pair cable M4: 4-pin connector M5: 5-pin connector	⑥ Cable length Blank: N/A (connector) 020: 2 m 025: 2.5 m
② Capacity Number and letter combination, where the letter indicates the unit (T = Tons, K = Kilograms, G = Grams), for example, 20T = 20 tons	④ Material H: Alloy steel		⑦ Customization

Outline Dimensions

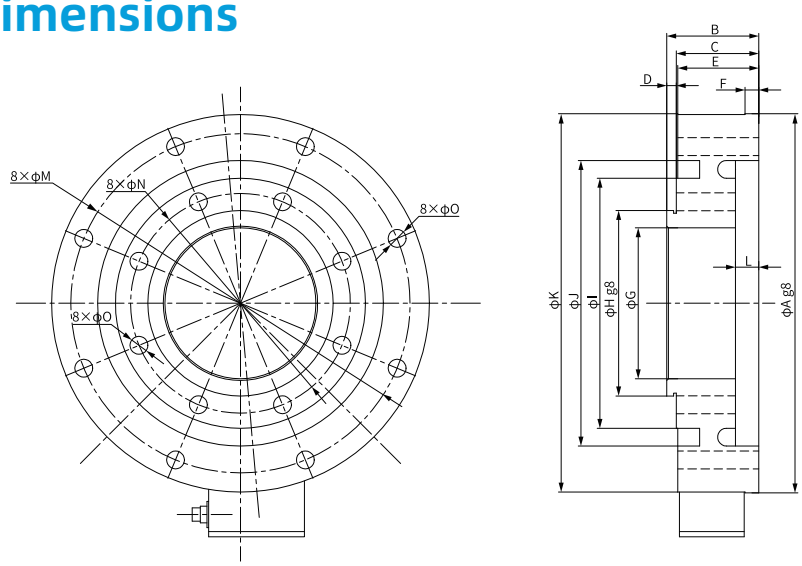

Range (kN)	Size (mm)														
	A	B	C	D	E	F	G	H	I	J	K	L	M	N	O
60	181	40	37	3	36	5	72	80	112	138	174	14	154	93	9
80	181	40	37	3	36	5	72	80	112	138	174	14	154	93	9
150	181	65	60	5	59	10	70	80	112	138	180	17	160	93	9
200	181	65	60	5	59	10	70	80	112	138	180	17	160	93	9
340	276	67	60	7	59	10	110	135	182	212	275	17	247	160	13
500	276	67	60	7	59	10	110	135	182	212	275	17	247	160	13
Others	Customization available based on actual usage requirements.														

Product Specifications

Item		Specification
Electrical characteristics	Operating voltage	18 V to 30 V
	Current consumption	≤ 100 mA
	Input impedance	780±30 Ω
	Output impedance	703±2 Ω
	Response frequency	≤ 2000 kHz
	Insulation resistance	≥ 5000 MΩ
Load characteristics	Rated load	60/80/150/200/340/500 kN
	Zero-point output	0 V 4 mA
	Full-scale output	10 V 20 mA
	Total error	±0.3% F.S.
	Hysteresis	±0.3% F.S.
	Repeatability	±0.1% F.S.
	Creep (30 min)	±0.1% F.S.
	Zero-point balance	±1% F.S.
	Safe overload	150% F.S.
	Overload limit	200% F.S.
Temperature characteristics	Ambient temperature	-30° C to +70° C
	Zero-point temperature effect	±0.05% F.S./10° C
	Output temperature effect	±0.05% F.S./10° C
Mechanical characteristics	IP rating	IP65
	Material	Alloy steel
	Cable length	5 m/10 m direct outgoing cable
	Cable outer diameter	6 mm